OVERVIEW OF LINE COMMUTATED CONVERTER BASED, HVDC

1. INTRODUCTION

Most HVDC schemes in commercial operation today employ line commutated thyristor valve converters. In a line commutated converter, the commutation is carried out by the ac system voltage. This brings inherent difficulty in continuing reliable commutation at very weak ac system voltages, e.g., during ac system faults. An ac system is considered to be very weak if the ratio of [short-circuit power at the point of connection] to the [rating of the HVDC scheme] is less than 2. Some HVDC schemes without dc lines operate successfully with a ratio of less than 1.5. In recent years converter topologies using series capacitors in the HVDC converter have also been utilized to overcome some of these problems. Furthermore, the increase in reactive power consumption with the increase of dc power transferred must be taken into account in the design of the scheme and its control system. The line commutated converter based HVDC (LCC HVDC) will continue to be used for bulk power HVDC transmission over several hundred MW, because this mature technology provides efficient, reliable and cost effective power transmission for many applications.

LCC HVDC was introduced in the USSR in 1950 (Kashira-Moscow) and in Sweden in 1954 (Gotland). Both systems used mercury arc valves. The first application of thyristor valves was to the Eel River scheme in Canada in 1972. The use of thyristors initiated a rapid increase in the installed capacity of HVDC systems because of the superior reliability of thyristor technology. In recent years further reliability improvements and compact designs with large capacity thyristors (up to 8.5 kV, 4 kA) have contributed to the significant progress of HVDC applications.

LCC HVDC has been applied to the following types of power transmission:

- Submarine and underground cable transmission
- Asynchronous link between ac systems
- Long distance bulk power transmission using overhead lines

Its technical capability, combined with its economic advantage and low operating losses, make LCC HVDC a practical solution for enlarging or enhancing power system interconnections.

This appendix provides an overview of LCC HVDC systems, including the general circuit configuration, control schemes, and operational characteristics. A list of LCC HVDC schemes in operation appears at the end of the appendix.

2. SYSTEM CONFIGURATION

HVDC transmission systems can be configured in many ways to suit operational requirements:

- The simplest configuration is the back-to-back interconnection in which two converters are on the same site without a transmission line.
- Monopolar HVDC is a link using a single high-voltage conductor line and the earth (or the sea) or a metallic low-voltage conductor as a return conductor. In recent schemes the use of earth return is becoming less common because of environmental opposition.
- The most common configuration is the bipolar link. Figure C.1 illustrates a simplified single-line diagram of a two-terminal bipolar HVDC transmission system. With a metallic return, the earth grounding is made at only one terminal.

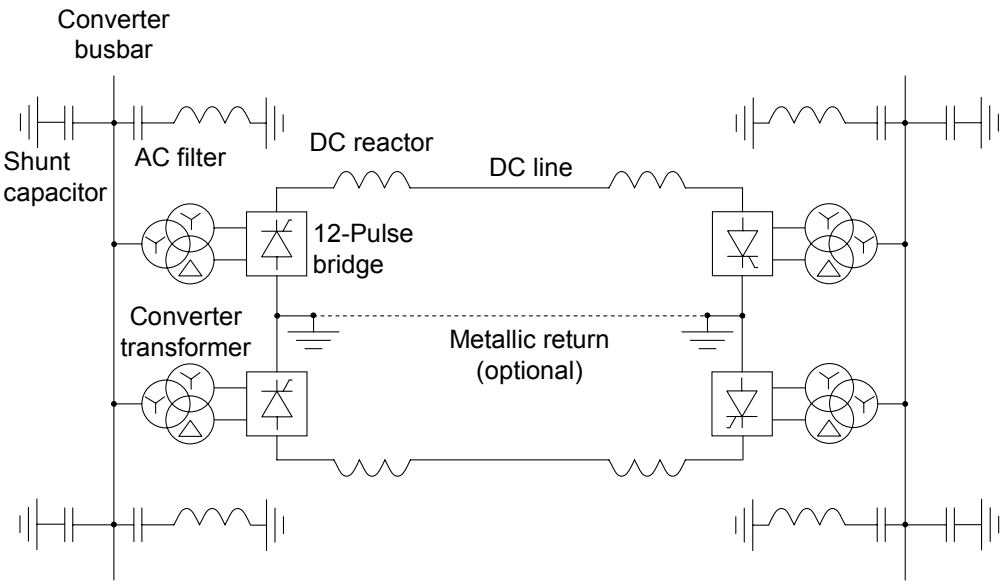

Figure C.1: One-line diagram of a two-terminal HVDC system

A few existing schemes have a multi-terminal configuration in which dc transmission lines connect three or more terminals at different sites. Some LCC HVDC schemes have also been provided with the capability of operating parallel converters at the ends of a dc transmission line.

An LCC HVDC system typically consists of the components discussed in the following paragraphs.

2.1 Converters

The converter performs the energy conversion between ac and dc. It usually has a 12-pulse arrangement, in which two 6-pulse bridges are connected in series on the dc side, as depicted in Figure C.2. The switching of the valves is ordered by the converter control. The rectifier is the converter in which power flows from ac to dc, and the inverter is the converter in which power flows from dc to ac. The principle of conversion and the waveforms associated with these conversions are detailed in references [C-1] and [C-2].

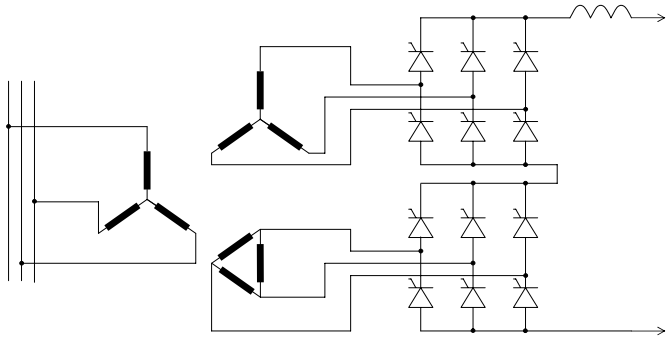

Figure C.2: Configuration of a 12-pulse bridge

2.2 Converter Transformers

The converter transformers adjust the supplied ac voltage to the valve bridges to suit the rated dc voltage. The transformer for a 12-pulse bridge has a star-star-delta three-winding configuration, or a combination of transformers in star-star and star-delta connections. The converter transformers may be provided as single-phase or three-phase units. The converter transformer typically has a leakage reactance of about 10-18% to limit the current during a short-circuit fault of the bridge arm.

2.3 Harmonic Filters

Converter operation generates harmonic currents and voltages on the ac and dc sides, respectively. On the ac side, a converter with a pulse number of p generates characteristic harmonics having the order of $np \pm 1$ (n=1,2,3,…). AC filters are installed to absorb those harmonic components and to reduce voltage distortion below a required threshold. Tuned filters and high pass filters are used as ac filters. On the dc side, the order of harmonics is np. DC filters, along with dc reactors, reduce the harmonics flowing out into the dc line. DC filters are not required in cable transmission or back-to-back schemes.

2.4 Shunt Capacitors

A line commutated converter in steady-state operation consumes reactive power of about 60% of the active, or dc, power transferred. The shunt capacitors installed at the converter ac bus supply the reactive power required to maintain the converter ac bus voltage. To achieve satisfactory power factor for the LCC HVDC converter, the shunt capacitors are normally subdivided and switched by circuit breakers as the dc power varies. Some or all of the shunt capacitors are normally configured as ac harmonic filters.

2.5 DC Reactors

The dc reactor contributes to the smoothing of the dc current and provides harmonic voltage reduction in the dc line. The dc reactor also contributes to the limitation of the crest current during a short-circuit fault on the dc line. It should be noted that the inductance of the converter transformer also contributes significantly to these functions.

2.6 DC Connections

Cables or overhead lines are always present on the pole connections, except in back-to-back systems. On the electrode connections, many existing systems use the ground return in normal operating conditions (monopolar systems) or in emergency conditions (bipolar systems). However, because of environmental opposition, the utilization of ground return is becoming increasingly problematic and the use of metallic return (as indicated in Figure C.1), although more expensive, is becoming common, especially for monopolar systems.

3. HVDC System Control and Operating Characteristics

The control system in an LCC HVDC converter station generally has a hierarchical structure with three layers, as illustrated in Figure C.3. From the uppermost, these three layers are referred in this report as bipole control, pole control, and converter unit control. In parallel to the first layer, the station control serves for configuration purposes.

The bipole control coordinates the power orders of the poles and distributes the power order to the pole control. Supplementary controls, such as automatic frequency control (AFC) and power modulation (PM)

to improve ac system stability, are also implemented in the bipole control, and these control signals are added to the power order to the pole control. The station control looks after the switching of harmonic filters and shunt capacitors in accordance with operating conditions.

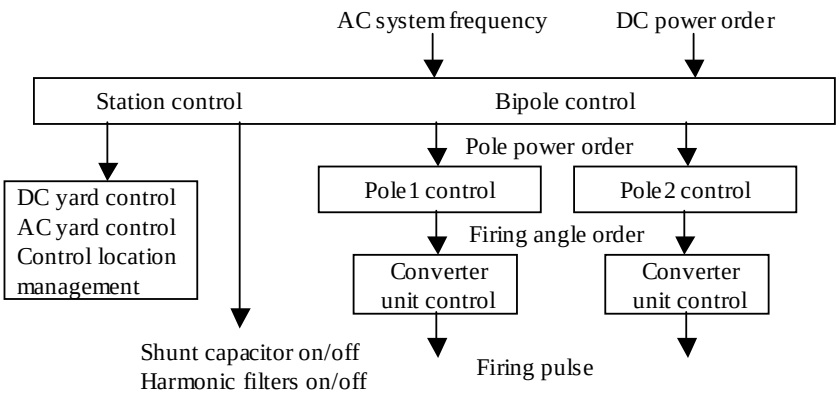

Figure C.3: Schematic configuration of LCC HVDC control system

The pole control shown as an example in Figure C.4 calculates a firing angle order of each converter to follow a power order or a dc voltage order. Finally, the converter unit control arranges firing pulse signals for switching devices, corresponding to the given firing angle order.

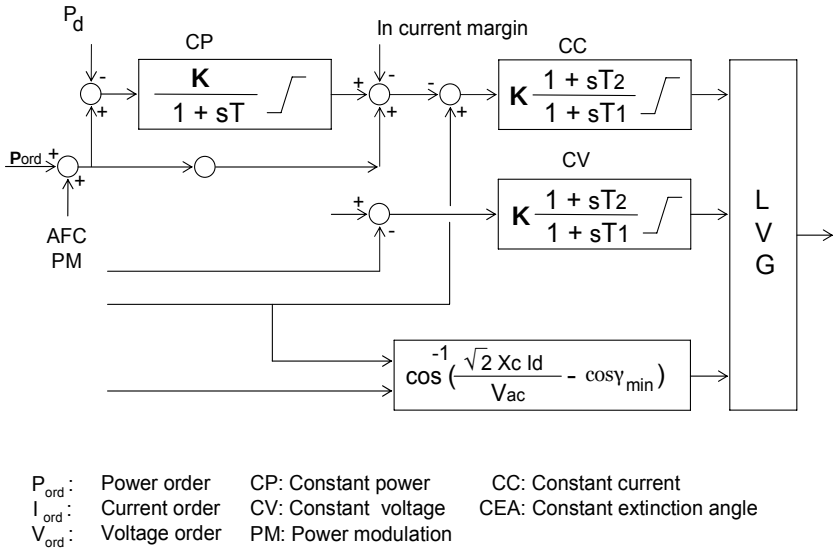

Figure C4: Example of block diagram of a pole control

An LCC HVDC system is usually operated so as to maintain constant dc current and dc voltage. The pole control produces control characteristics, shown in Figure C.5, by selecting the minimum value among the outputs of constant current (CC), constant voltage (CV), and constant extinction angle (CEA) controls, as shown in Figure C.4. Extinction angle control is needed to avoid commutation failures in inverter operation, which occur if the commutation process does not complete a certain time before the thyristor becomes forward biased. In the event of a disturbance in the ac network, e.g., as a consequence of a remote fault, a commutation failure may still occur. The two characteristics of a rectifier and an inverter are

symmetrical with respect to the horizontal axis of dc current. The dc current order of the inverter is smaller than that of the rectifier by the current margin, thereby ensuring stable dc current control. The intersection **A** in Figure C.5 indicates an operating point in steady-state condition. Usually, a rectifier sets dc current and an inverter sets dc voltage. The actual operating points of respective converters, however, differ in dc voltage due to the voltage drop of the dc line. Current control is generally required to have a quick response, and voltage control consequently has a comparably slow response to avoid unstable control interaction.

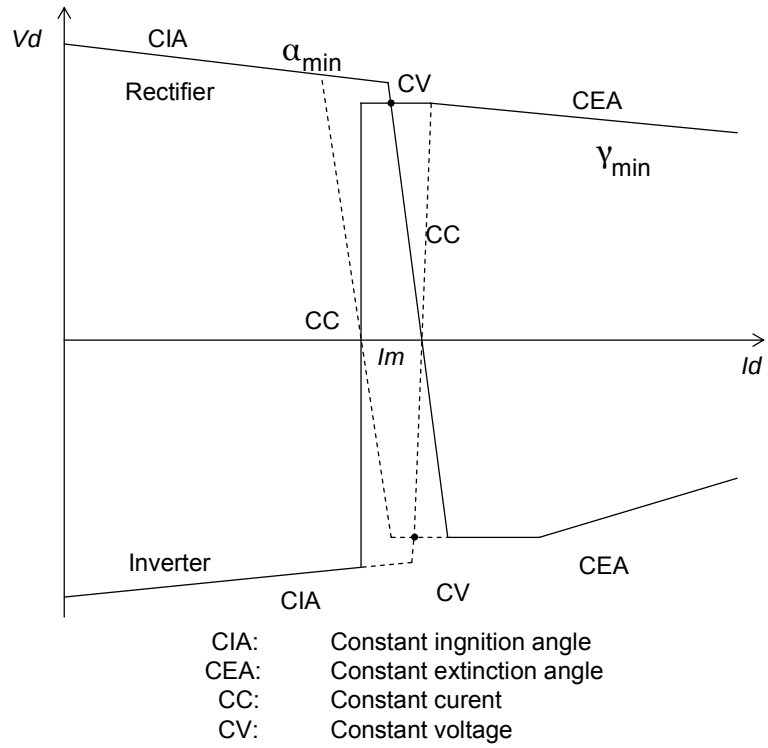

Figure C.5: Converter control characteristics

The setting value of power to be transferred by the HVDC system is ordered from a dispatching center. At any time, only one terminal can control the dc power in a two-terminal system. The converter station that has been assigned the dc power regulation role activates constant power control (CP). This power control is integrated in parallel with dc current control loop and corrects the current order setting so as to adjust actual dc power to the setting value.

Power reversal, or an interchange of the rectifier and inverter operations, can be done by changing the converter that subtracts the current margin indicated in Figure C.4 from the current order setting. A new operating point **B** with reversed dc power is the intersection of the two dotted lines in Figure C.5. In an LCC HVDC system, the power reversal action changes dc voltage polarity and the dc current direction remains the same as before.

4. LIST OF LCC HVDC SCHEMES

Table C.1 provides information about major LCC HVDC schemes in service by the end of 2003. Figure C.6 shows the location of LCC HVDC schemes in the world.

Table C.1: List of major LCC HVDC schemes in service by 2003

System		Year Commissioned	Valve[*1]	Rated Capacity [MW]	Rated DC Voltage [kV]	Transmission Distance (Cable) [km]	Application[*2]
Acaray		1981	T	55	25	0	Intertie, FC
Baltic Cable		1994	T	600	450	262 (250)	Intertie
Blackwater		1985	T	200	57	0	Intertie
Brazil-Argentina		1998	T	1000			Intertie, FC
Broken Hill		1986	T	40		0	Intertie
Cahora Bassa		1977,79	T	1920	±533	1420	Generation
Chandrapur-Padge		1998	T	1500	±500	752	Generation
Chandrapur-Ramgundam		1997	T	1000	205	0	Intertie
Chateauguay		1984	T	1000	140	0	Intertie
Cheju Island		1993	T	300	±180	(101)	Load
Cross Channel	1	1985/86	T	1000	±270	(70)	Intertie
	2	1986	T	1000	±270	(70)	
CU-project		1979	T	1000	±400	710	Generation
DA Hamil		1977	T	100	50	0	Intertie
(Durnrohr)[*3]		1983	T	550	145	0	Intertie
East South Interconnector		2003	T	2000	±500	1450	Generation
Eddy County		1983	T	200	82	0	Intertie
Eel River		1972	T	320	80	0	Intertie
(Etzenricht)[*3]		1993	T	600	160	0	Intertie
Fenno-skan		1989(/98)	T	500(572)	400	233 (200)	Intertie
Gezhouba-Shanghai		1989,90	T	1200	±500	1046	Generation
Gotland II & III		1983/87	T	260	±150	(98)	Load
Highgate		1985	T	200	57	0	Intertie
Hokkaido-Honshu		1979/80/93	T	600	±250	168 (44)	Intertie
Inga-Shaba		1982	T	560	±500	1700	Generation
Intermountain		1986	T	1920	±500	785	Generation
Itaipu	BP1	1985/86	T	3150	±600	South route 807	Generation
	BP2	1989	T	3150	±600	North route 818	
Italy-Greece		2000	T	500	400	310 (200)	Intertie
Kii channel		2000	T	1400	±250	102 (51)	Generation
Kontek		1998	T	600	400	(170)	Intertie
Konti-Skan	1	1965/2005	T	250	+250	180 (85)	Intertie
	2	1988	T	300	-285	150 (87)	
Leyte-Luzon		1998	T	440	350	455 (23)	Intertie
Madawaska		1985	T	350	140	0	Intertie
McNeill		1989	T	150	42	0	Intertie
Miles City		1985	T	200	82	0	Intertie
Minami-Fukumitsu		1999	T	300	125	0	Intertie
Moyle		2001	T	500	250	(63)	Intertie
Nelson River	BP1 P1	1973/93	T	3420	+450	895	Generation
	BP1 P2	1973/77/2005	T		-450		
	BP2	1978/85	T		±500	937	
New Zealand	Pole 1	1965/92	M	1240	+270/ -350	617 (42)	Intertie
	Pole 2	1992	T				
Oklaunion		1984	T	200	82	0	Intertie
Pacific Intertie		1970/85/2004 1989	T T	2000 1100	±500	1361	Intertie

Table C.1: List of major LCC HVDC schemes in service by 2003 (Continued)

System		Year Commissioned	Valve*1	Rated Capacity [MW]	Rated DC Voltage [kV]	Transmission Distance (Cable) [km]	Application*2
Quebec-New England		1986/92	T	2690	±450	1486	Generation, Multiterminal
Rihand-Dadri		1991	T	1500	±500	814	Generation
Rivera		2001	T	72.5	22	0	Intertie, FC
Sakuma		1965/93	T	300	125	0	Intertie, FC
Sardinia-Italy (Corsica tapping)		1992	T	300/300/50	200	385 (121)	Intertie, Multiterminal
Sasaram		2002	T	500	205	0	Intertie
Shin-Shinano	1	1977	T	300	125	0	Intertie, FC
	2	1992	T	300	125		
Virginia Smith		1988	T	200	55.5	0	Intertie
Sileru Barsoor		1989	T	200	200	196	Intertie
Skagerrak	1, 2	1976/77	T	940	250	240 (127)	Intertie
	3	1993	T		350		
Square Butte		1977	T	500	±250	749	Generation
SwePol		1999	T	600	450	230	Intertie
Thailand Malaysia		2001	T	300	300	110	Intertie
Three Gorges-Ghuangzhou		2003	T	3000	±500	1000	Generation
Tian-Guang		2000	T	1800	±500	903	Intertie
Urugaiana		1995	T	50	17.9	0	Intertie, FC
Vancouver	Pole 1	1968/69	M	312	+260	74 (33)	Load
	Pole 2	1977/79	T	370	-280		
Visakhapatnam		1998	T	500	205	0	Intertie
Vindhyachal		1989	T	500	70	0	Intertie
Volgograd-Donbass		1962/65	M	720	±400	470	Intertie
		1974/77	T				
Vyborg		1981,84/2000	T	1400	±85	0	Intertie
Welsh		1995	T	600	170	0	Intertie

*1) T: Thyristor Valve, M: Mercury-Arc Valve
*2) Intertie: AC system interconnection, Generation: Generation transmission, Load: Load feeding, FC: Frequency conversion
*3) Schemes no longer in operation

5. REFERENCES

[C-1] Kunder, P., *Power System Stability and Control*. EPRI Power Engineering Series, McGraw-Hill, 1994.

[C-2] Arrillaga, J., *High Voltage Direct Current Transmission*, 2nd Edition. IEE Power and Energy Series PO 029, 1998.

[C-3] Chamia, M., "HVDC - A major option for the electricity networks of the 21st Century," IEEE WPM 1999 - Panel Session, The Role of HVDC Transmission in the 21st Century, November 2001.

[C-4] Christofersen, D.J., Vancers, I., Elahi, H., Bennett, M.G. "A Survey of the Reliability of HVDC Systems Throughout the World During 1997-1998." CIGRÉ Paper No.14-102, 2000.

[C-5] Vancers, I., Christofersen, D.J., Leirbukt, A., Bennett, M.G., "A Survey of the Reliability of HVDC Systems Throughout the World During 1999-2000." CIGRÉ Paper No.14-101, 2002.